TECHNICAL DATA

Three Phase Electric Motors - Cast Iron Frame
PE30 280 S 4 IE3
75 kW / 100 Cv
1485 RPM

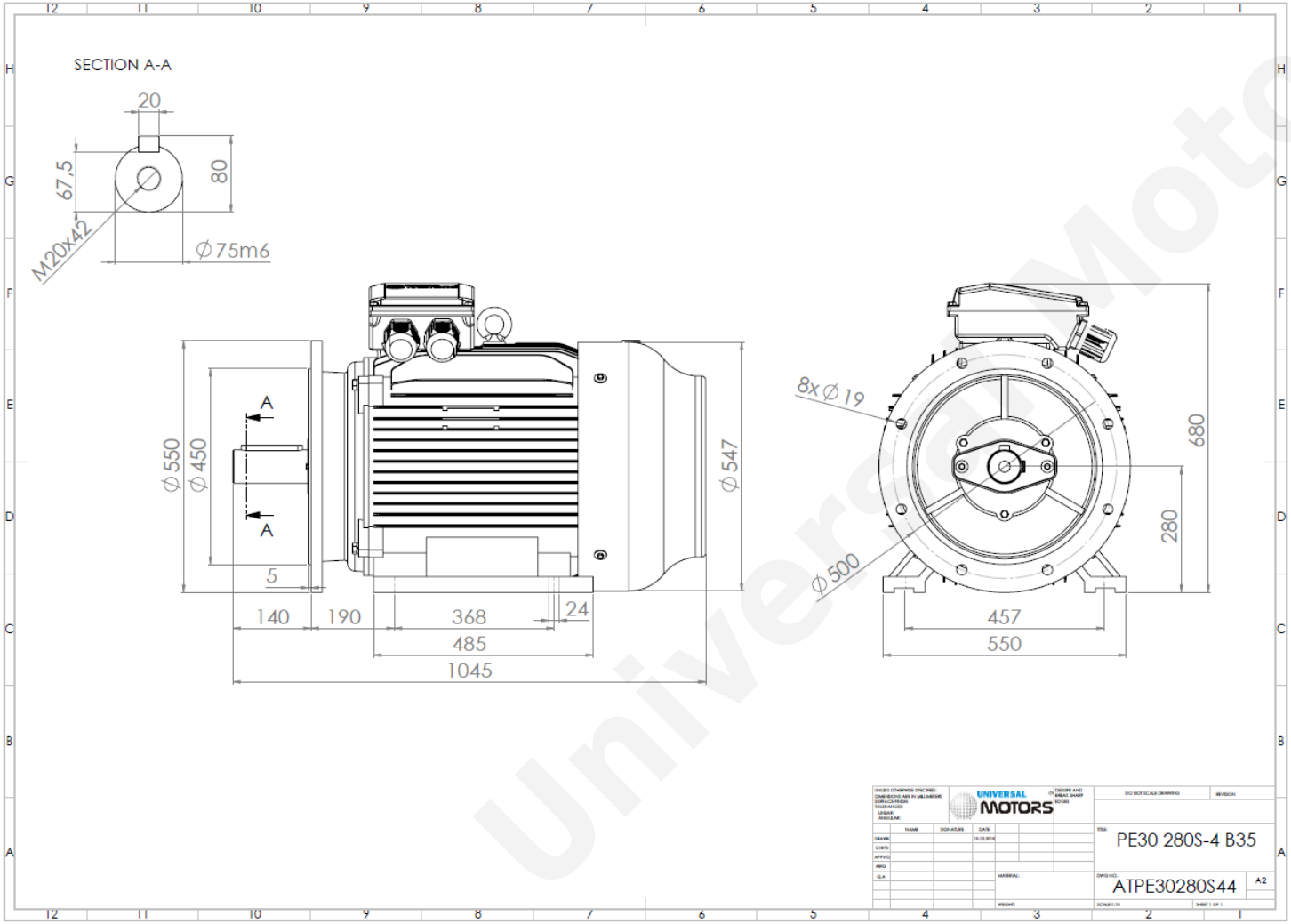

Motor type:	**PE30 280 S 4 IE3**
Output:	**75 kW / 100 Cv**
Speed (min^{-1}):	**1485 RPM**
Frequency:	**50 Hz**
Voltage:	**400 V**
Current:	**129 A**
Power factor (Cos Ø):	**0.88**
Poles:	**4**
Insulation class:	**F**
Temperature rise Class:	**B**
Efficiency 50%:	**94.2 %**
Efficiency 75%:	**95.1 %**
Efficiency 100%:	**95.0 %**
Torque:	**482 N.m**
Tstarting/Tnominal:	**2.0**
Istarting/Inominal:	**6.9**
Tmaximum/Tnominal:	**2.3**
Noise:	**69 Db(A)**
Weight:	**600 Kg**
Bearing DE:	**6317 C3**
Bearing NDE:	**6317 C3**

Regime - S1 **Altitude - 1000m** **Environment Temperature - 40ºC**

* References applied only in the UK

CONTACTS:

UNIVERSAL MOTORS
Rua de São Brás,745
4480-782 VILA DO CONDE

Tel: +351 252 299 080
Fax: +351 252 299 089
Mail: geral@universalmotors.pt

Universal Motors